DURA ART STONE

ITEM **W-AU-Y**

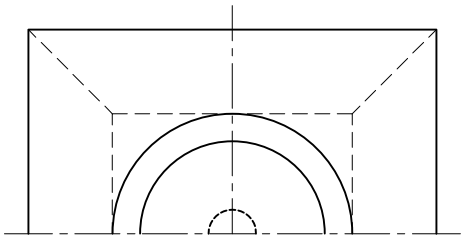

PLAN VIEW

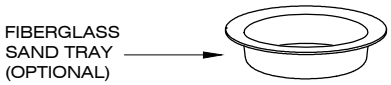

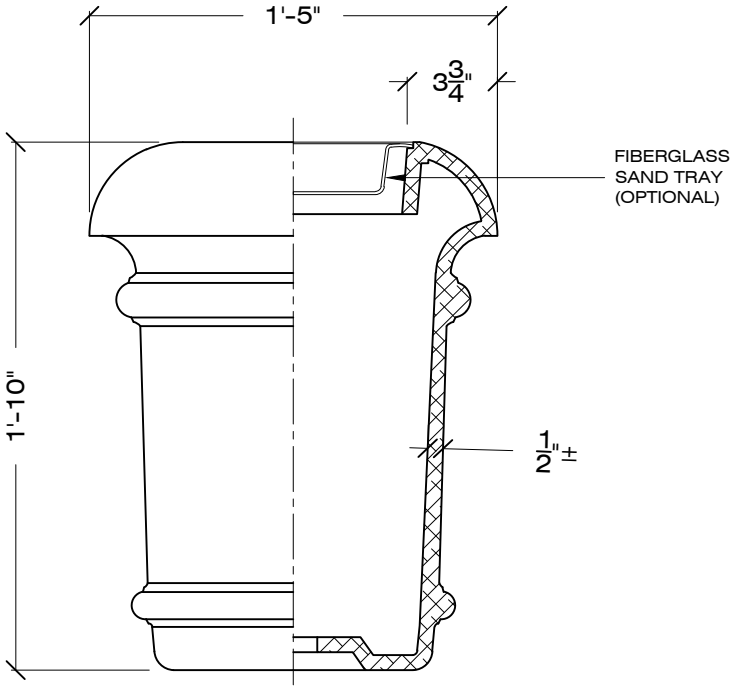

ELEVATION **SECTION**

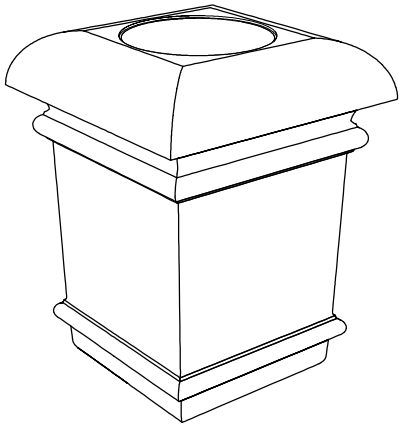

EXPLODED VIEW

1-1/2" = 1' - 0

MODEL No. FINISH SAND TRAY COLOR

ORDER CODE: W - AU-Y - S-1 - LSB - AU / ST - GRAY

GLASCRETE COLOR SAND TRAY OPTION

SPECIFICATIONS :

MATERIAL : GLASCRETE

WEIGHT : 80 LBS

DIMENSIONS : 17" ⊡ X 22" HEIGHT

COLOR : S-1 S-2 S-3 S-4 S-5 S-6 S-7 S-8 S-9 S-10 S-11 S-12 S-13 S-14 S-15 S-16 S-17 S-18

SAND TRAY COLOR : BLK / BRN / GRAY / WHITE

FINISH : / LSB /

APPROVED BY : _____

LSB: LIGHT SANDBLAST

CONTACT: CORPORATE / ADMINISTRATIVE: 650 965 7100

www.duraartstone.com

SPECIFICATION © DURAARTSTONE