DURA ART STONE

ITEM **S-8PT-4**

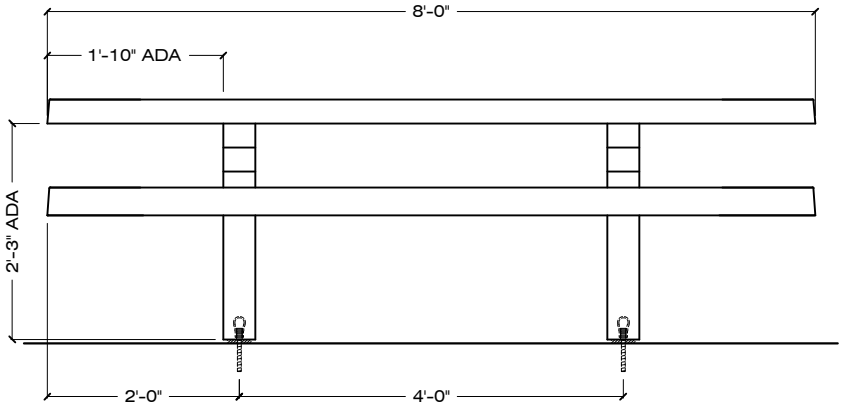

FRONT VIEW

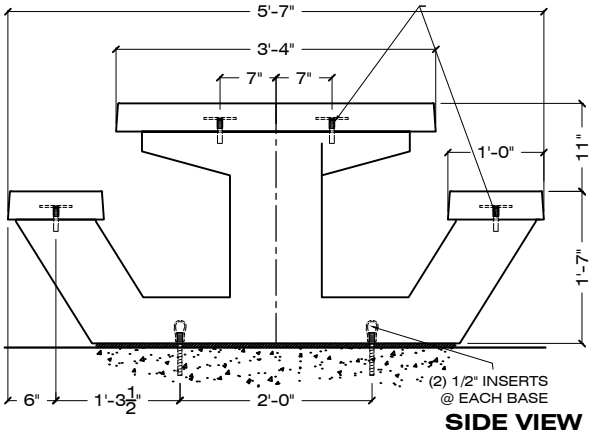

SIDE VIEW

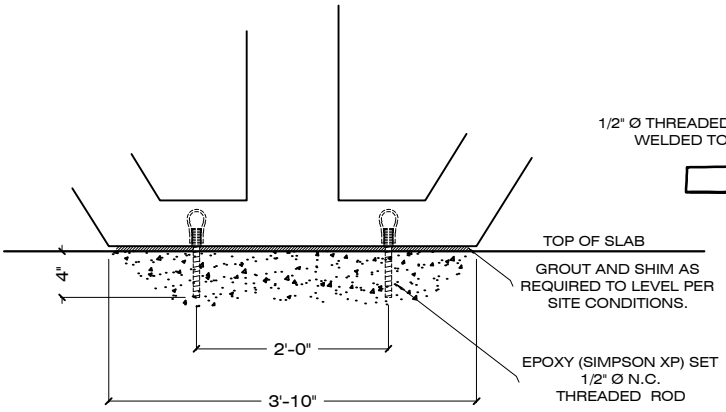

SURFACE MOUNT (B)

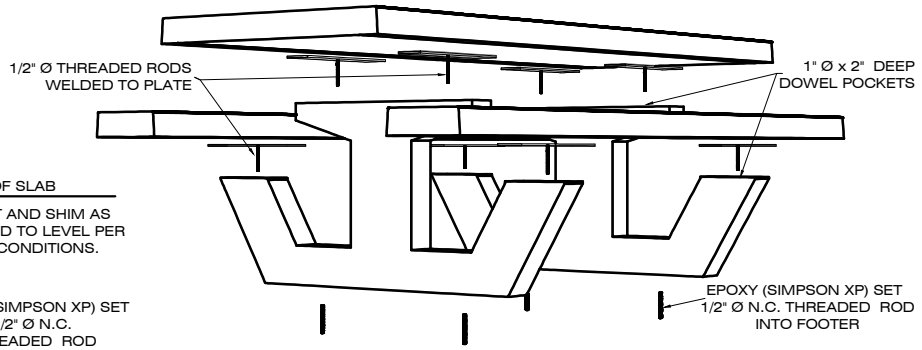

EXPLODED VIEW

PICNIC TABLES - ON SITE ASSEMBLY REQUIRED

1/2" = 1' - 0

ADA COMPLIANT

ORDER CODE: S - 8 - PT-4 - B - S-1 - LSB / AE

- S — PRECAST CONCRETE
- 8 — LENGHT IN FEET
- PT-4 — DESIGN
- B — MOUNTING OPTION
- S-1 — COLOR
- LSB / AE — FINISH (FINISH EXAMPLE: TOP OF BENCHES & TABLES RECEIVE MATTE SEALER)

SPECIFICATIONS :

MATERIAL : PRECAST CONCRETE

REBAR : #3 BAR

WEIGHT :

TABLE	1,160 LBS
(2) TABLE BASE EA.	285 LBS
(2) SEATS EA.	350 LBS
TOTAL WEIGHT	2,430 LBS

DIMENSIONS : 96" L X 67 W X 30" H

COLOR : S-1 S-2 S-3 S-4 S-5 S-6 S-7 S-8 S-9 S-10 S-11 S-12 S-13 S-14 S-15 S-16 S-17 S-18

FINISH : **SK / AE / LSB / MSB**

APPROVED BY : _____

SK: SMOOTH / AE: ACID ETCH / LSB: LIGHT SANDBLAST / MSB: MEDIUM SANDBLAST

CONTACT: CORPORATE / ADMINISTRATIVE: 650 965 7100

www.duraartstone.com

SPECIFICATION © DURAARTSTONE