**DURA ART STONE**

ITEM **S-PW-3A**

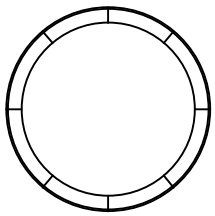

**ROUND**

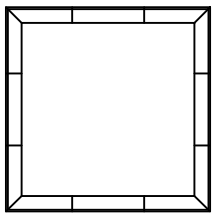

**SQUARE**

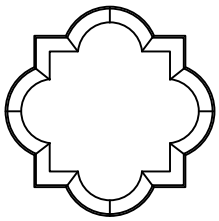

**QUATREFOIL**

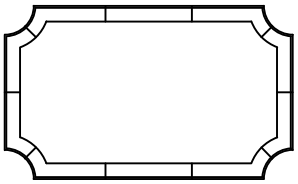

**RECTANGULAR**

**POOL WALL CONFIGURATIONS**

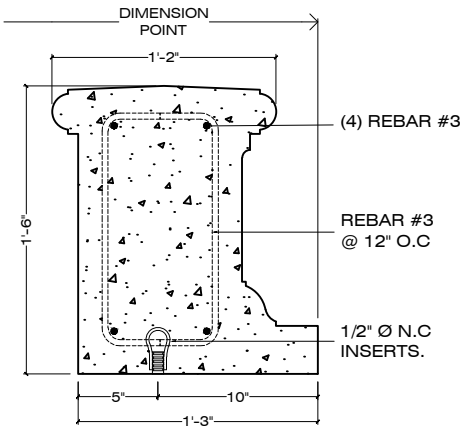


**SECTION**

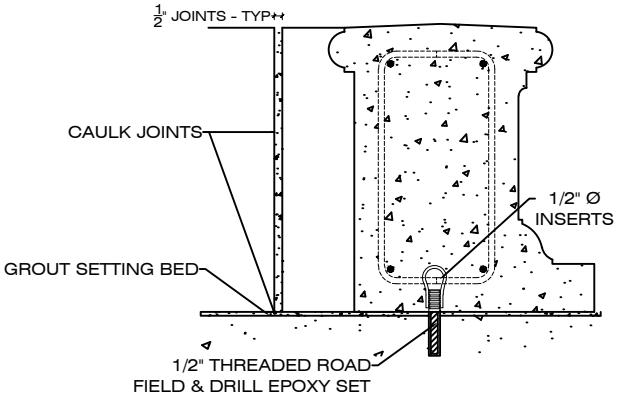


**TYPICAL INSTALLATION DETAIL**

1" = 1' - 0

**ORDER CODE: S - PW-3A - S-1 - LSB**

S: PRECAST CONCRETE; PW-3A: MODEL No.; S-1: COLOR; LSB: FINISH

## SPECIFICATIONS :

**MATERIAL :** PRECAST CONCRETE

**REBAR :** #3 GALVANIZED REBAR

**WEIGHT PER LINEAL FOOT :** 220 LBS

**DIMENSIONS :** 15" WIDTH X 18" HEIGHT

**COLOR :** S-1 S-2 S-3 S-4 S-5 S-6 S-7 S-8 S-9 S-10 S-11 S-12 S-13 S-14 S-15 S-16 S-17 S-18

**FINISH :** **SK / AE / LSB / MSB**

**APPROVED BY :** _____

SK: SMOOTH / AE: ACID ETCH / LSB: LIGHT SANDBLAST / MSB: MEDIUM SANDBLAST

CONTACT: CORPORATE / ADMINISTRATIVE: 650 965 7100

**www.duraartstone.com**

SPECIFICATION © DURAARTSTONE